Measurements

ME CEILING STOVE WITHOUT DV KIT

Nordpeis
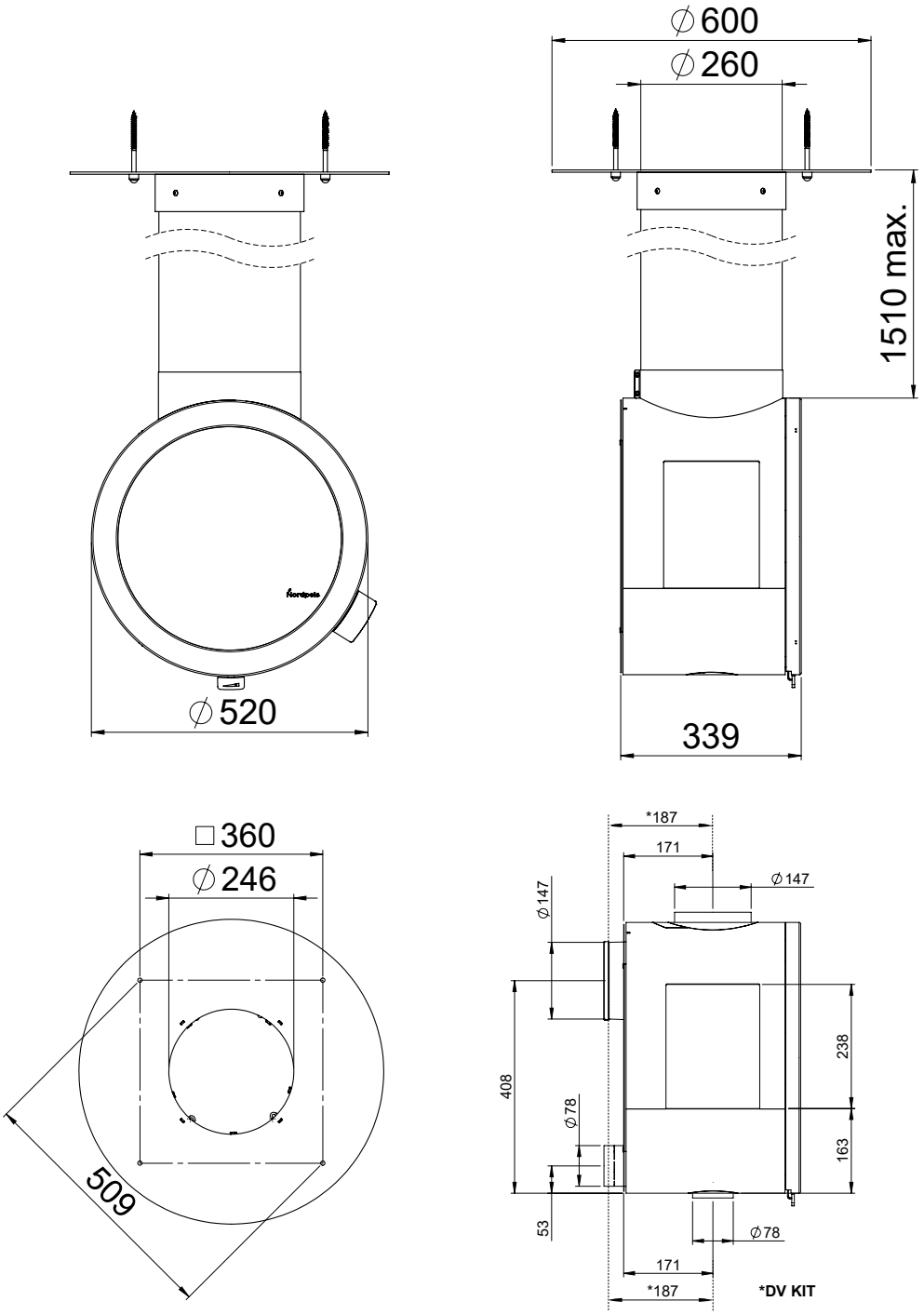
ME CEILING - STOVE CEILING = MM/AIR/CHIMNEY